Clamping profile KLW 30-30

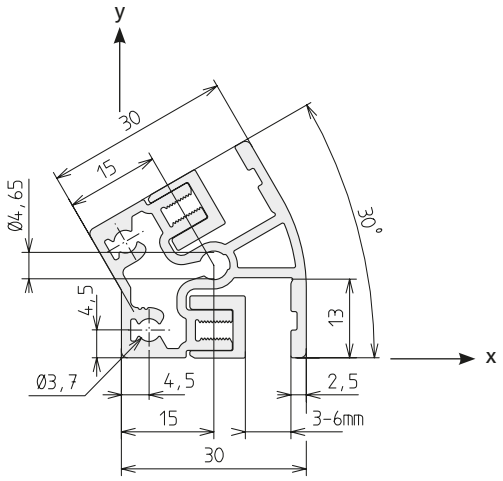

Area	317	mm²
I_x	2.4	cm⁴
I_y	3.3	cm⁴
W_x	1.6	cm³
W_y	2.0	cm³
Weight	857	g/m

Code No. Clamping profile KLW 30-30			Anodised
4415000	Cut to size	max. 6000 mm	Clear
4415001	Bar	6000 mm	Clear

Code No. Corner joint	Type
4412406	KLW 30-30

Clamping profile KLW 30-45

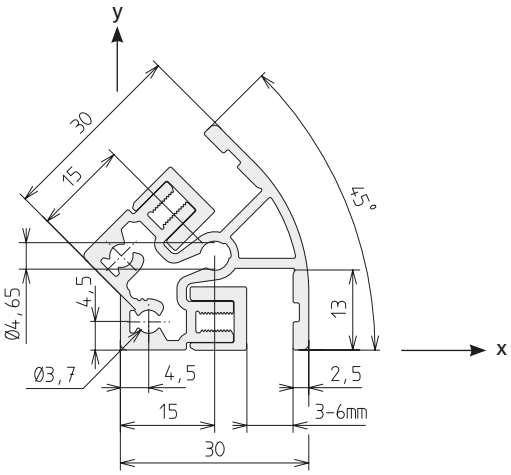

Area	314	mm²
I_x	2.2	cm⁴
I_y	3.2	cm⁴
W_x	1.4	cm³
W_y	2.0	cm³
Weight	848	g/m

Code No. Clamping profile KLW 30-45			Anodised
4425000	Cut to size	max. 6000 mm	Clear
4425001	Bar	6000 mm	Clear

Code No. Corner joint	Type
4422406	KLW 30-45